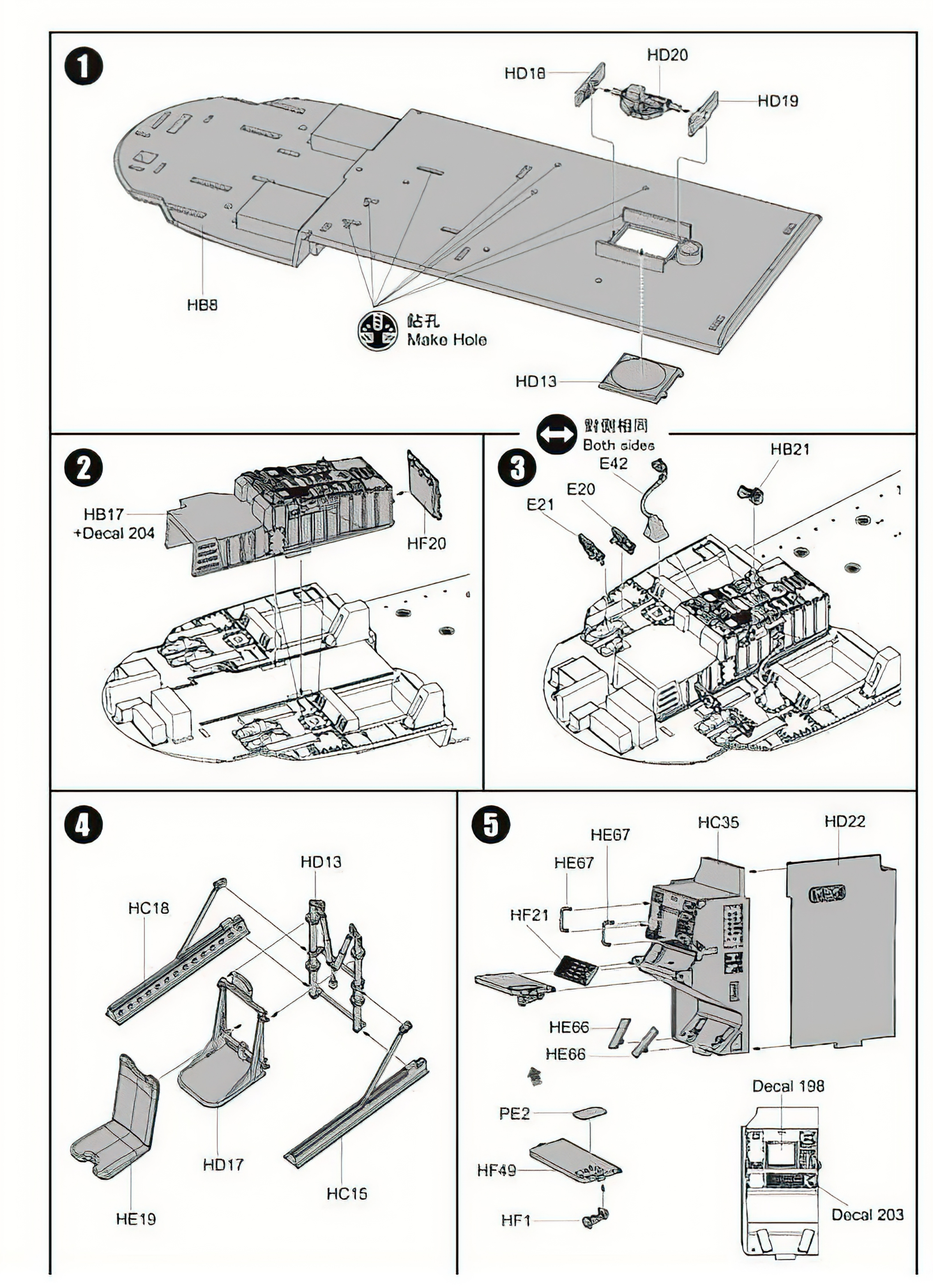
1
HD20
HD18
HD19
HB8
鉆孔
Make Hole
HD13
對側相同
Both sides
2
HB17
+Decal 204
HF20
3
HB21
E42
E20
E21
4
HD13
HC18
HD17
HC16
HE19
5
HC35
HD22
HE67
HE67
HF21
HE66
HE66
Decal 198
PE2
HF49
HF1
Decal 203

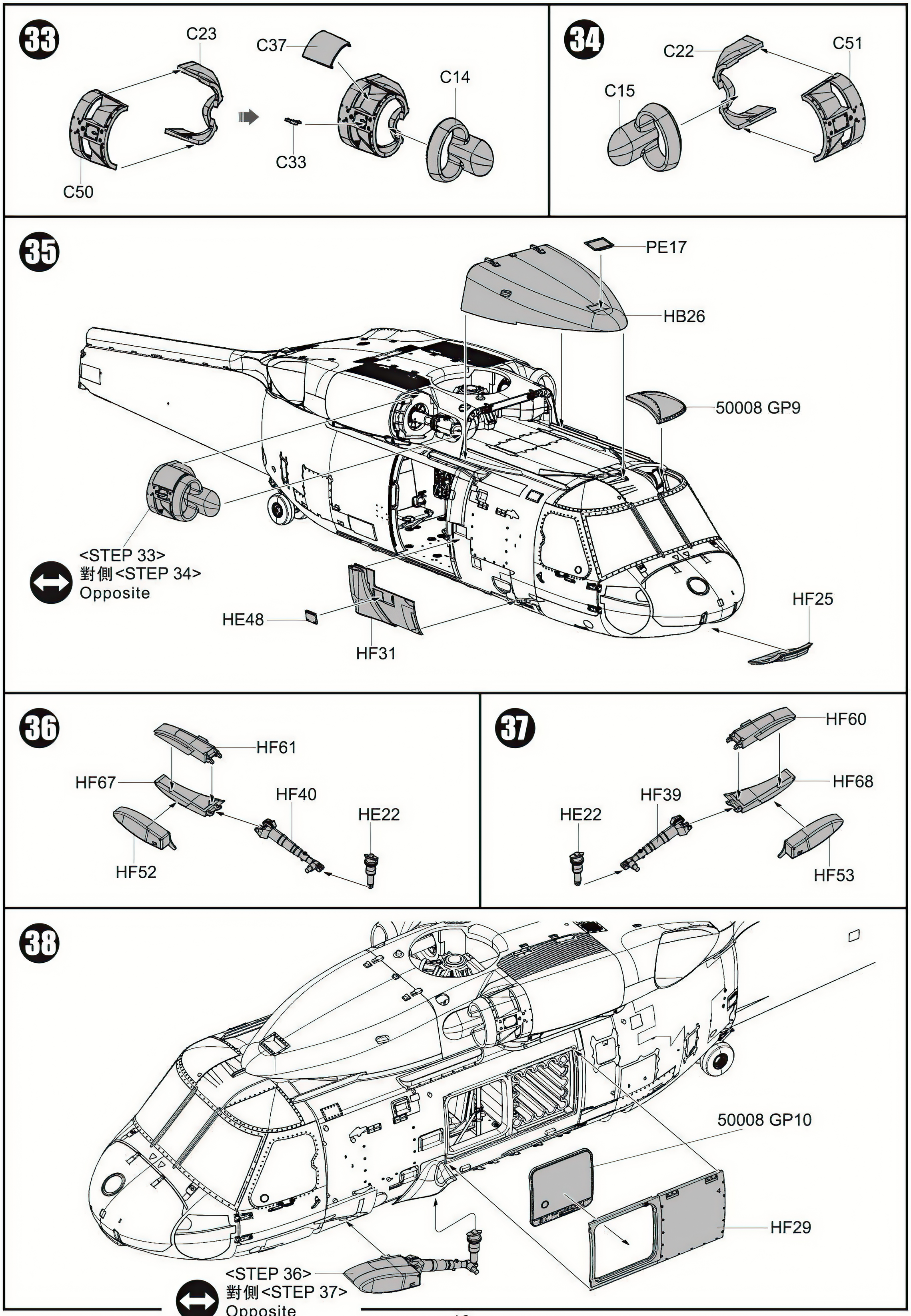
33
C23
C37
C14
C33
C50
34
C22
C51
C15
35
PE17
HB26
50008 GP9
<STEP 33>
對側<STEP 34>
Opposite
HE48
HF31
HF25
36
HF61
HF67
HF40
HE22
HF52
37
HF60
HF68
HF39
HE22
HF53
38
50008 GP10
HF29
<STEP 36>
對側<STEP 37>
Opposite